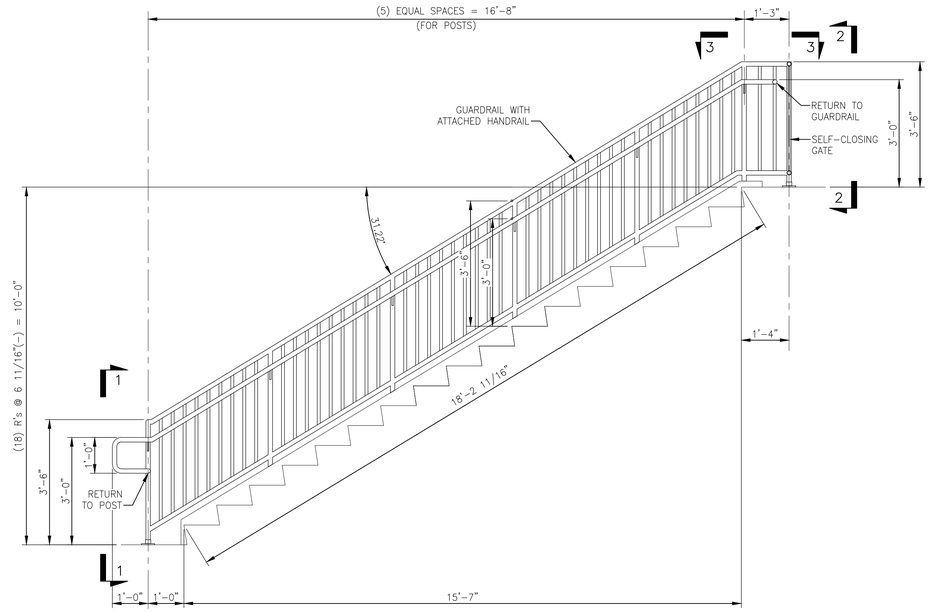

'1RA' – RAILING ASSEMBLY – ONE REQUIRED

SCALE: 1/2" = 1'-0"

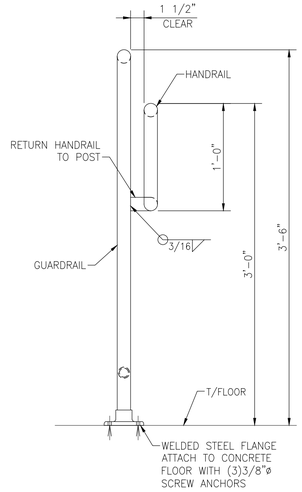

SECTION '1–1'

SCALE: 1 1/2" = 1'-0"

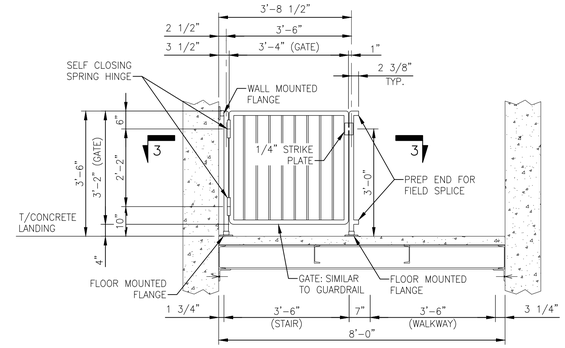

SECTION '2–2'

SCALE: 1/2" = 1'-0"

BILL OF MATERIAL

MATERIAL LISTED FOR ONE UNIT OR ASSEMBLY

PART NO.	NO. REQ.	DESCRIPTION	MAT'L.	REMARKS
		'1RA' – RAILING ASSEMBLY – ONE REQUIRED		
pr1	ONE	PIPE 1 1/4" (SCH 40) x 75'-0"±	A53 GR B	CUT TO SUIT
br1	ONE	BAR 1/2"ø x 180'-0"±	A36	CUT TO SUIT
rh1	2	SELF CLOSING SPRING HINGE	STEEL	
rf1	4	MOUNTING FLANGES w/3 ANCHORS	STEEL	
		'1RB' – RAILING ASSEMBLY – ONE REQUIRED		
pr1	ONE	PIPE 1 1/4" (SCH 40) x 58'-0"±	A53 GR B	CUT TO SUIT
br1	ONE	BAR 1/2"ø x 160'-0"±	A36	CUT TO SUIT
rf1	4	MOUNTING FLANGES w/3 ANCHORS	STEEL	

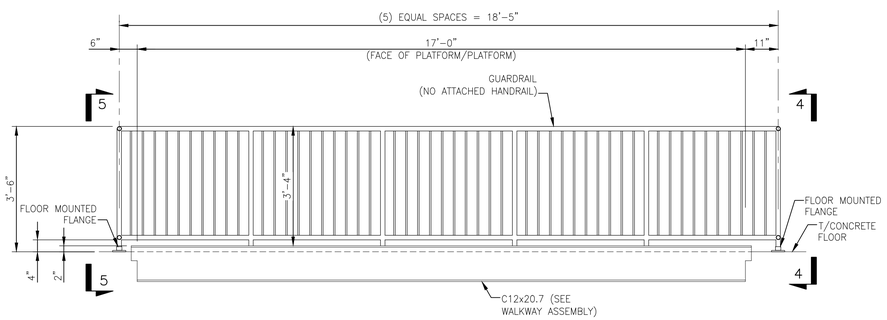

'1RB' – RAILING ASSEMBLY – ONE REQUIRED

SCALE: 1/2" = 1'-0"

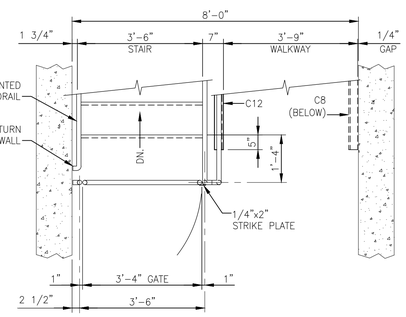

SECTION '3–3'

SCALE: 1/2" = 1'-0"

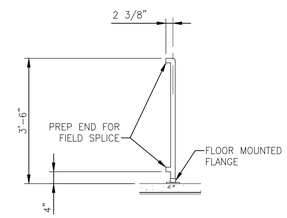

SECTION '4–4'

SCALE: 1/2" = 1'-0"

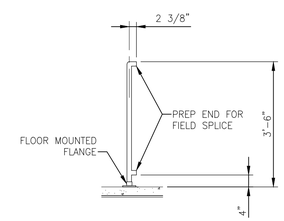

SECTION '5–5'

SCALE: 1/2" = 1'-0"

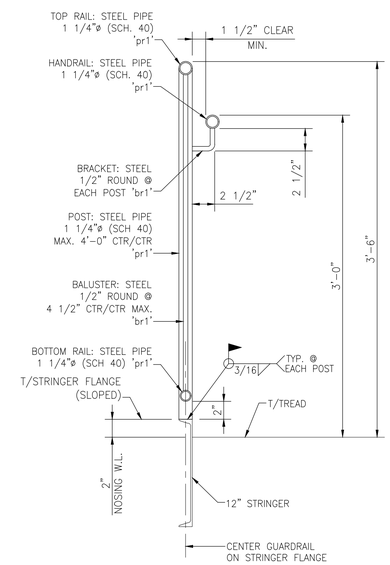

TYPICAL GUARDRAIL PROFILE

SCALE: 1 1/2" = 1'-0"

NOTE:
ALL MATERIAL SHOWN ON THIS DRAWING SHALL RECEIVE ONE COAT OF STANDARD SHOP PRIMER U.N.O.

NO.	DATE	REVISION DESCRIPTION	ISSUED BY
0	5/2/22	ISSUE FOR FABRICATION	TS

STAIR A
FABRICATION DETAILS

DRAWN BY: TS
CHECKED BY: JA
SCALE: AS NOTED

PROJECT NUMBER 21-175

RD-1