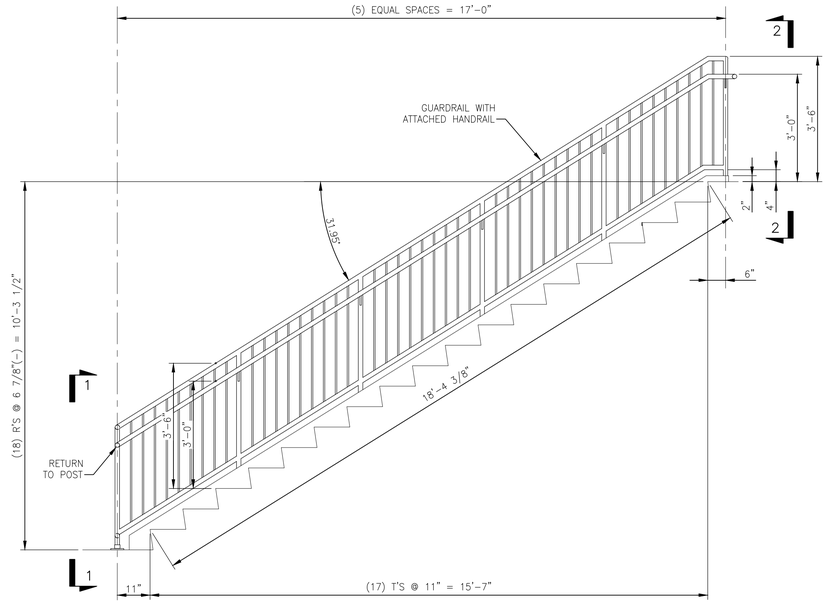

'2RA' – RAILING ASSEMBLY – ONE REQUIRED

SCALE: 1/2" = 1'-0"

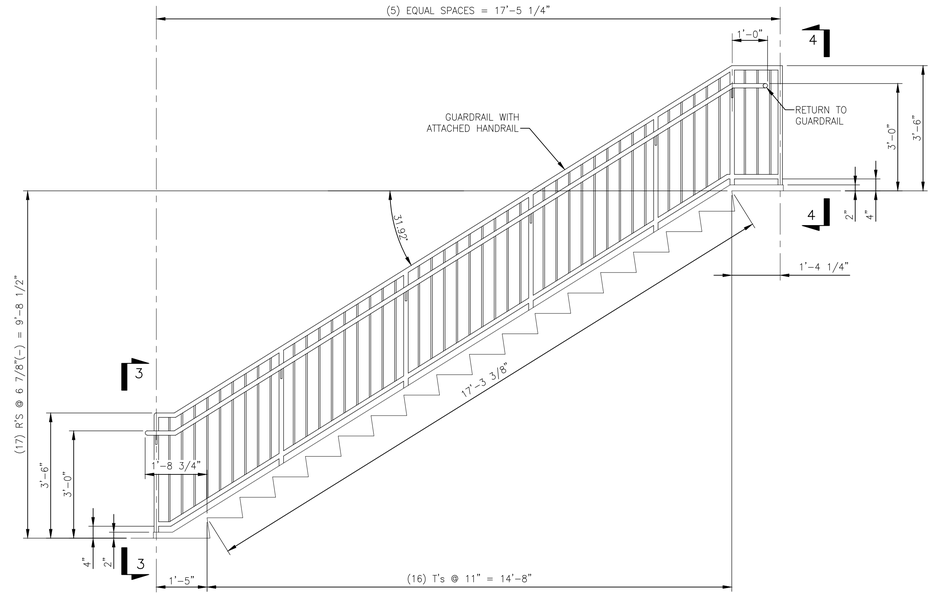

'2RB' – RAILING ASSEMBLY – ONE REQUIRED

SCALE: 1/2" = 1'-0"

BILL OF MATERIAL

MATERIAL LISTED FOR ONE UNIT OR ASSEMBLY

PART NO.	NO. REQ.	DESCRIPTION	MAT'L.	REMARKS
		'2RA' – RAILING ASSEMBLY – ONE REQUIRED		
pr1	ONE	PIPE 1 1/4" (SCH 40) x 60'-0"±	A53 GR B	CUT TO SUIT
br1	ONE	BAR 1/2"ø x 140'-0"±	A36	CUT TO SUIT
rf1	ONE	MOUNTING FLANGES w/3 ANCHORS	STEEL	
		'2RB' – RAILING ASSEMBLY – ONE REQUIRED		
pr1	ONE	PIPE 1 1/4" (SCH 40) x 60'-0"±	A53 GR B	CUT TO SUIT
br1	ONE	BAR 1/2"ø x 140'-0"±	A36	CUT TO SUIT
		'2RC' – RAILING ASSEMBLY – ONE REQUIRED		
pr1	ONE	PIPE 1 1/4" (SCH 40) x 22'-0"±	A53 GR B	CUT TO SUIT
bb1	7	STEEL BRACKET (#1938R BY WAGNER)	STEEL	
		'2RD' – RAILING ASSEMBLY – ONE REQUIRED		
pr1	ONE	PIPE 1 1/4" (SCH 40) x 22'-0"±	A53 GR B	CUT TO SUIT
bb1	7	STEEL BRACKET (#1938R BY WAGNER)	STEEL	
		'2RE' – RAILING ASSEMBLY – ONE REQUIRED		
pr1	ONE	PIPE 1 1/4" (SCH 40) x 21'-0"±	A53 GR B	CUT TO SUIT
bb1	7	STEEL BRACKET (#1938R BY WAGNER)	STEEL	

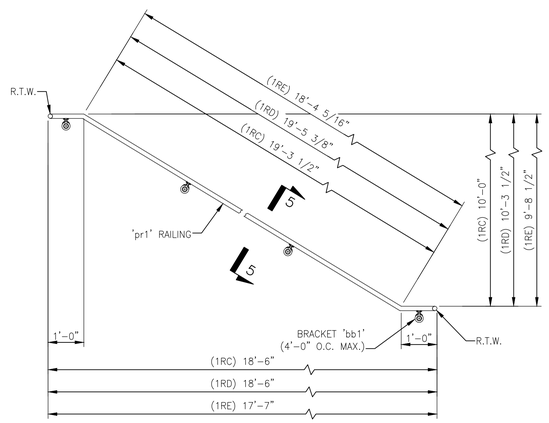

'2RC' – RAILING ASSEMBLY – ONE REQUIRED

SCALE: 1/2" = 1'-0"

'2RD' – RAILING ASSEMBLY – ONE REQUIRED

SCALE: 1/2" = 1'-0"

'2RE' – RAILING ASSEMBLY – ONE REQUIRED

SCALE: 1/2" = 1'-0"

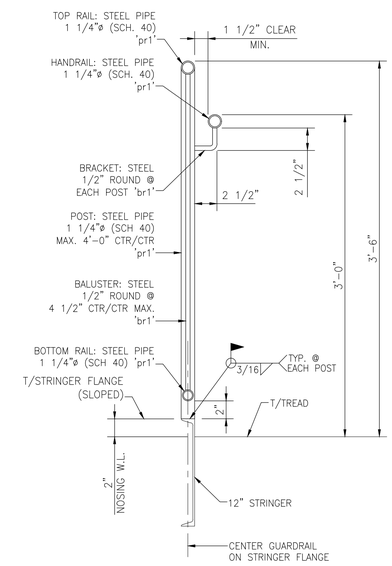

TYPICAL GUARDRAIL PROFILE

SCALE: 1 1/2" = 1'-0"

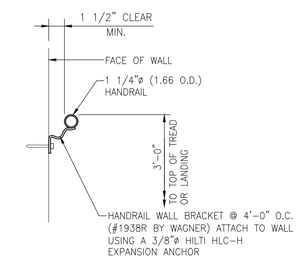

TYPICAL WALL MOUNTED RAIL PROFILE

SCALE: 1 1/2" = 1'-0"

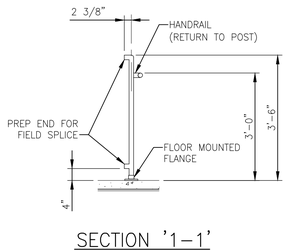

SECTION '1–1'

SCALE: 1/2" = 1'-0"

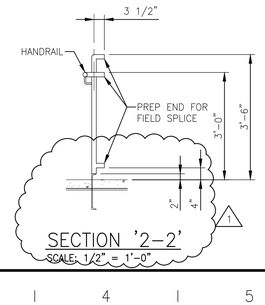

SECTION '2–2'

SCALE: 1/2" = 1'-0"

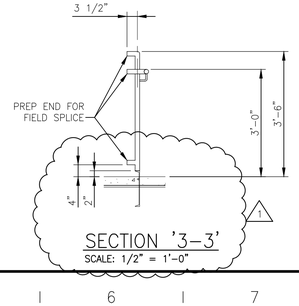

SECTION '3–3'

SCALE: 1/2" = 1'-0"

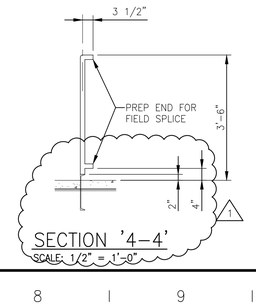

SECTION '4–4'

SCALE: 1/2" = 1'-0"

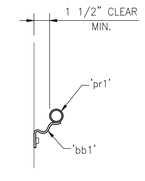

SECTION '5–5'

SCALE: 1 1/2" = 1'-0"

NOTE:
ALL MATERIAL SHOWN ON THIS DRAWING SHALL RECEIVE ONE COAT OF STANDARD SHOP PRIMER U.N.O.

NO.	DATE	REVISION DESCRIPTION	ISSUED BY
1	5/16/22	CORRECTED DETAILS	TS
0	5/2/22	ISSUE FOR FABRICATION	TS

STAIR A
FABRICATION DETAILS

DRAWN BY: TS
CHECKED BY: JA
SCALE: AS NOTED
PROJECT NUMBER 21-175
RD-2