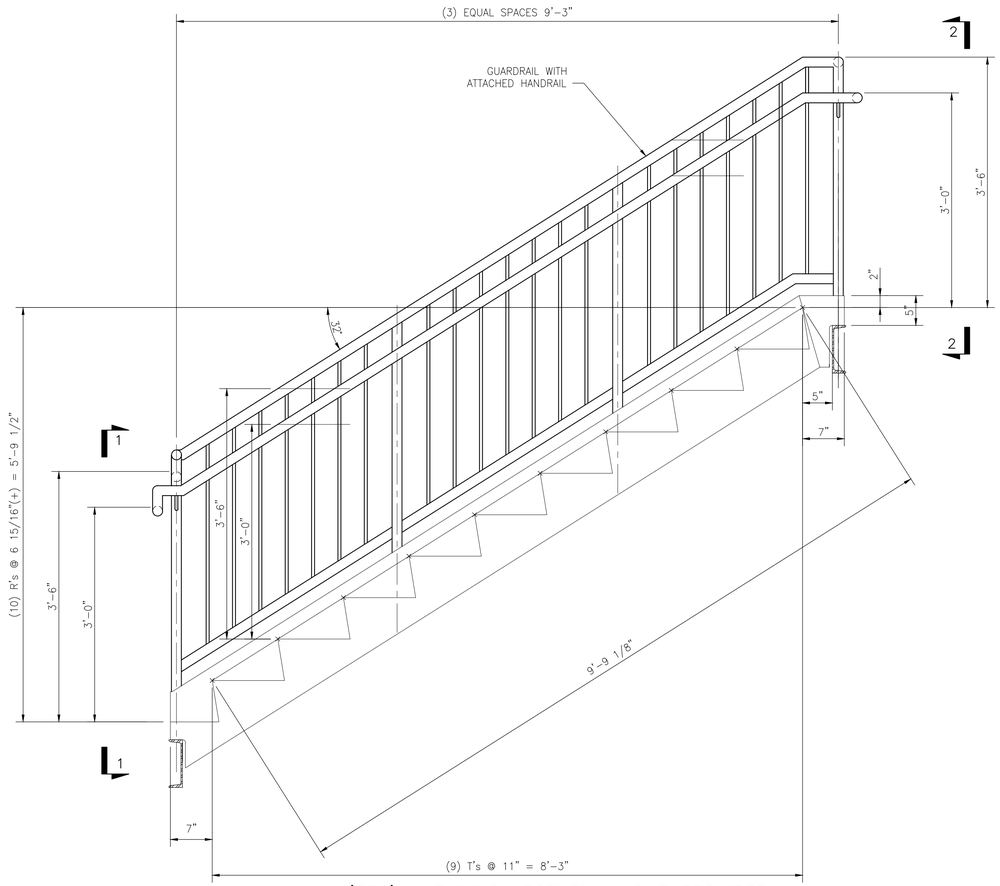

'7RA' – RAILING ASSEMBY – ONE REQUIRED

SCALE: 1"=1'-0"

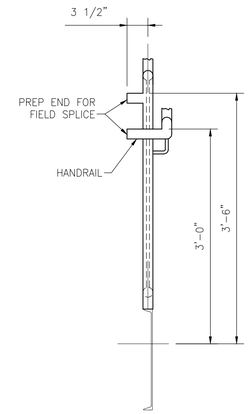

SECTION '1–1'

SCALE: 1"=1'-0"

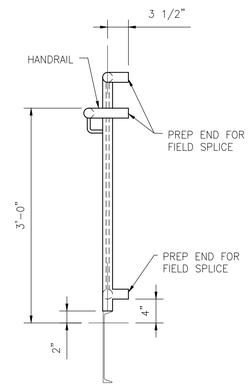

SECTION '2–2'

SCALE: 1"=1'-0"

BILL OF MATERIAL

MATERIAL LISTED FOR ONE UNIT OR ASSEMBLY

PART NO.	NO. REQ.	DESCRIPTION	MAT'L.	REMARKS
		'7RA' – RAIL ASSEMBLY – ONE REQUIRED		
pr1	ONE	PIPE 1 1/4" (SCH 40) x 48'-0"±	A53 GR B	CUT TO SUIT
br1	ONE	BAR 1/2"ø x 62'-0"±	A36	CUT TO SUIT
		'7RB' – RAIL ASSEMBLY – ONE REQUIRED		
pr1	ONE	PIPE 1 1/4" (SCH 40) x 13'-0"±	A53 GR B	CUT TO SUIT
bb1	4	STEEL BRACKET (#1938R BY WAGNER)	STEEL	

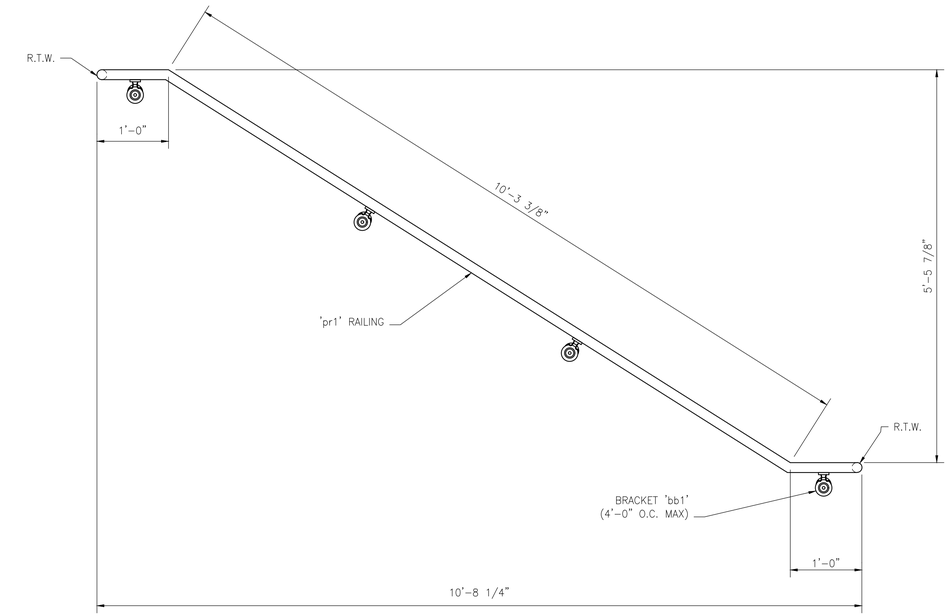

'7RB' – RAILING ASSEMBY – ONE REQUIRED

SCALE: 1"=1'-0"

ALL MATERIAL SHOWN ON THIS DRAWING SHALL RECEIVE ONE COAT OF STANDARD SHOP PRIMER U.N.O.

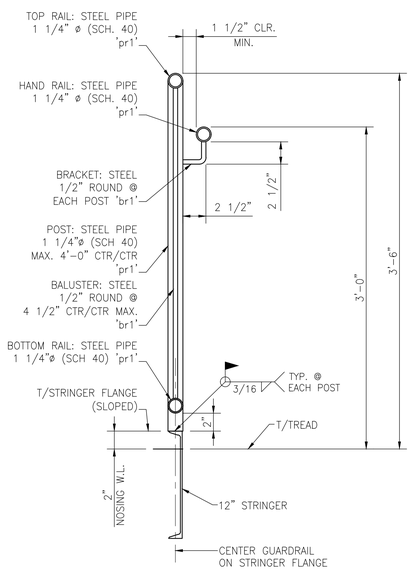

TYPICAL GUARDRAIL PROFILE

SCALE: 1 1/2"=1'-0"

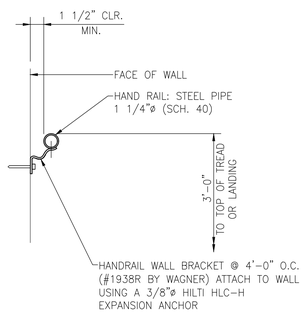

TYPICAL WALL MOUNTED RAIL PROFILE

SCALE: 1 1/2"=1'-0"

NO.	DATE	REVISION DESCRIPTION	ISSUED BY
2			
1			
0	5/24/22	ISSUE FOR FABRICATION	TS

STAIR A
FABRICATION DETAILS

DRAWN BY: KSB
CHECKED BY: TS
SCALE: AS NOTED
PROJECT NUMBER 21-175
RD-7