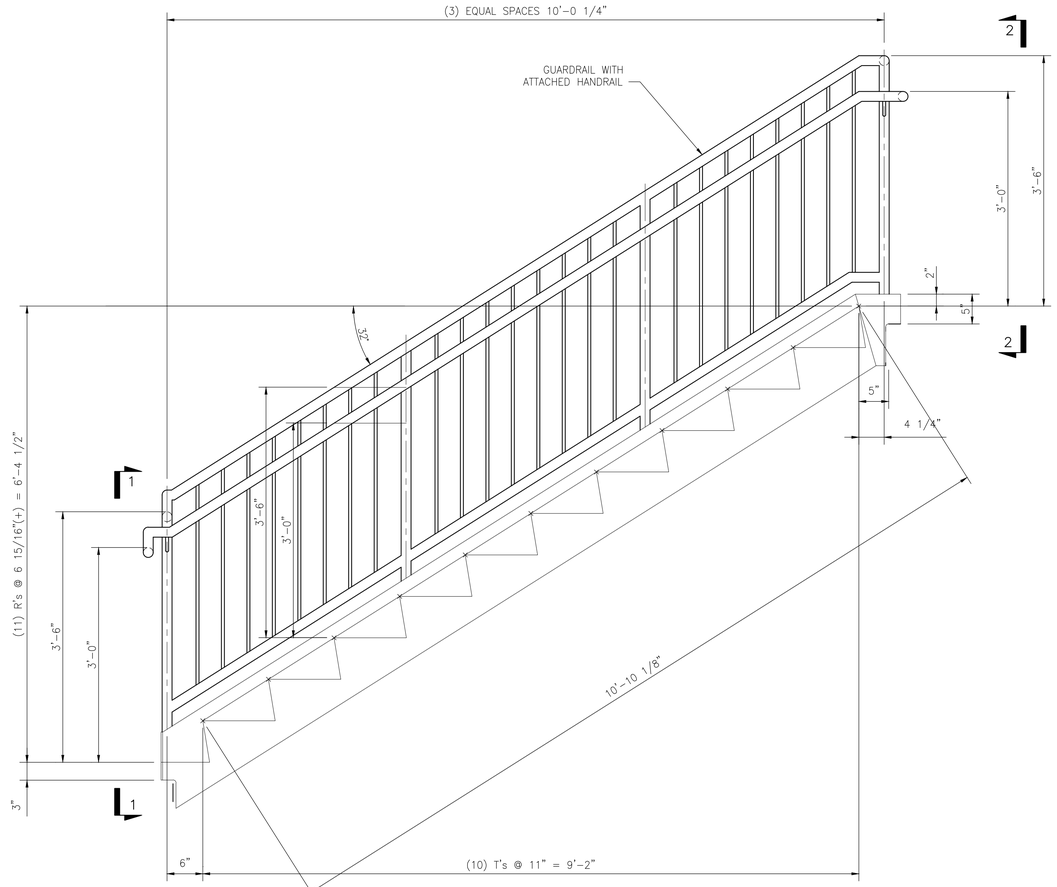

'8RA' – RAILING ASSEMBY – ONE REQUIRED

SCALE: 1"=1'-0"

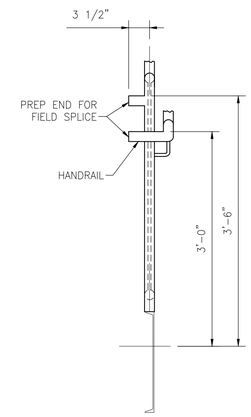

SECTION '1-1'

SCALE: 1"=1'-0"

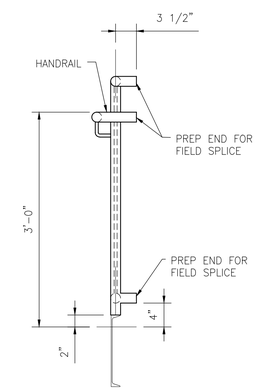

SECTION '2-2'

SCALE: 1"=1'-0"

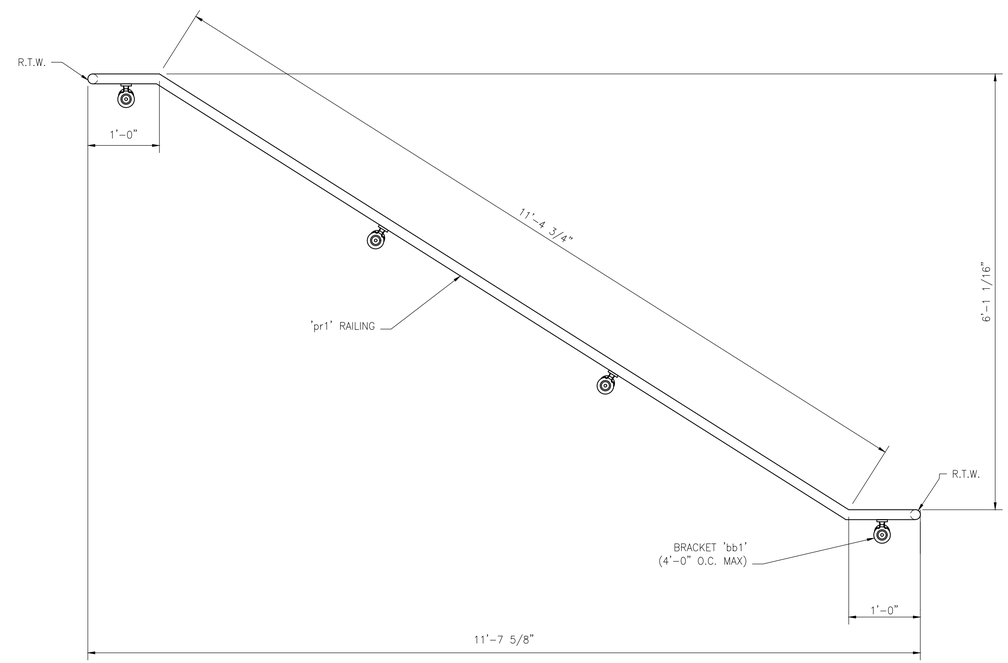

'8RB' – RAILING ASSEMBY – ONE REQUIRED

SCALE: 1"=1'-0"

BILL OF MATERIAL

MATERIAL LISTED FOR ONE UNIT OR ASSEMBLY

PART NO.	NO. REQ.	DESCRIPTION	MAT'L.	REMARKS
		'8RA' – RAIL ASSEMBLY – ONE REQUIRED		
pr1	ONE	PIPE 1 1/4" (SCH 40) x 52'-0"±	A53 GR B	CUT TO SUIT
br1	ONE	BAR 1/2"ø x 78'-0"±	A36	CUT TO SUIT
		'8RB' – RAIL ASSEMBLY – ONE REQUIRED		
pr1	ONE	PIPE 1 1/4" (SCH 40) x 14'-0"±	A53 GR B	CUT TO SUIT
bb1	4	STEEL BRACKET (#1938R BY WAGNER)	STEEL	

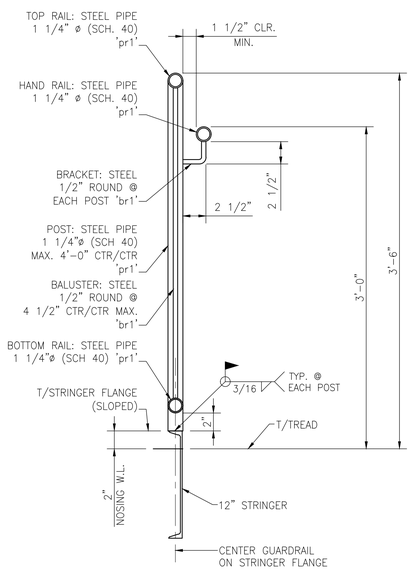

TYPICAL GUARDRAIL PROFILE

SCALE: 1 1/2"=1'-0"

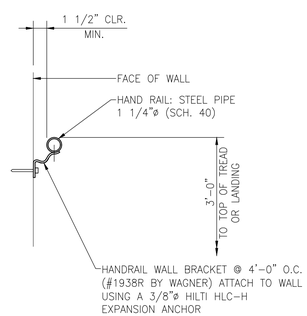

TYPICAL WALL MOUNTED RAIL PROFILE

SCALE: 1 1/2"=1'-0"

ALL MATERIAL SHOWN ON THIS DRAWING SHALL RECEIVE ONE COAT OF STANDARD SHOP PRIMER U.N.O.

NO.	DATE	REVISION DESCRIPTION	ISSUED BY
2			
1			
0	5/24/22	ISSUE FOR FABRICATION	TS

STAIR A
FABRICATION DETAILS

DRAWN BY: KSB
CHECKED BY: TS
SCALE: AS NOTED

PROJECT NUMBER 21-175

RD-8