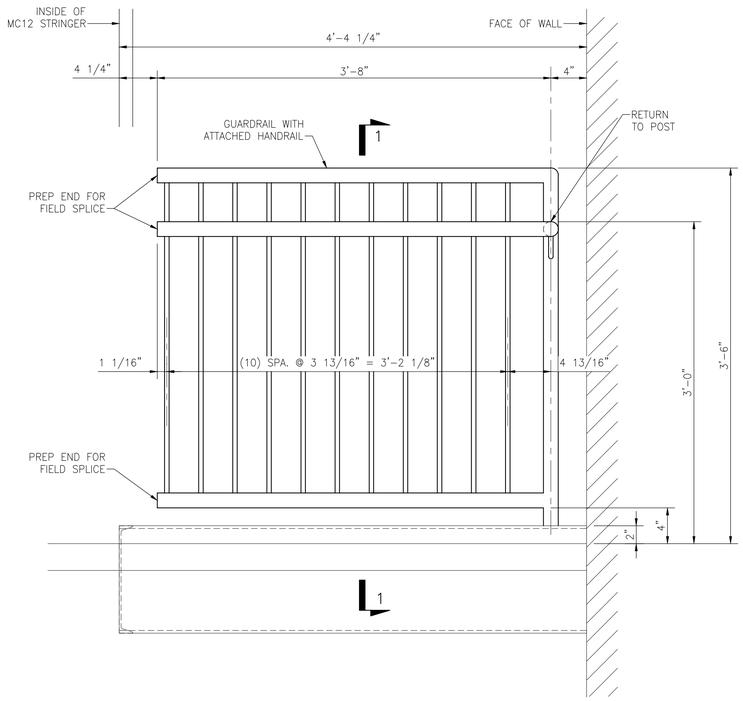

'9RA' – RAILING ASSEMBY – ONE REQUIRED

SCALE: 1 1/2"=1'-0"

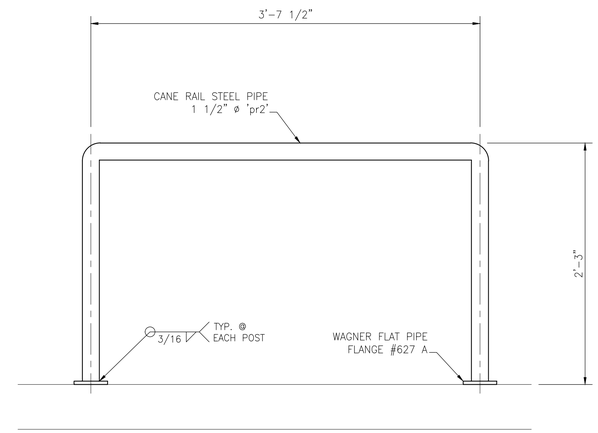

'9RB' – RAILING ASSEMBY – ONE REQUIRED

SCALE: 1 1/2"=1'-0"

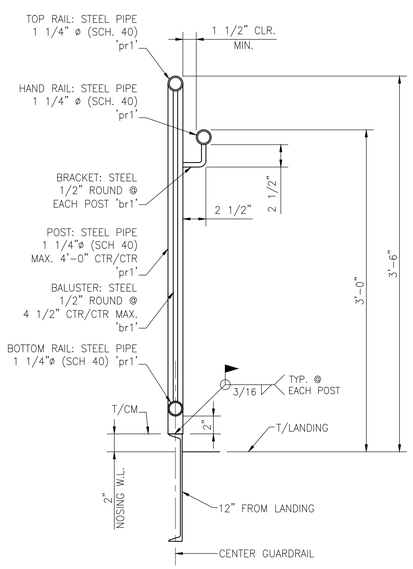

SECTION '1 –1'

SCALE: 1 1/2"=1'-0"

BILL OF MATERIAL

MATERIAL LISTED FOR ONE UNIT OR ASSEMBLY

PART NO.	NO. REQ.	DESCRIPTION	MAT'L.	REMARKS
		'9RA' – RAIL ASSEMBLY – ONE REQUIRED		
pr1	ONE	PIPE 1 1/4" (SCH 40) x 20'-0"±	A53 GR B	CUT TO SUIT
br1	ONE	BAR 1/2"ø x 32'-0"±	A36	CUT TO SUIT
		'9RB' – RAIL ASSEMBLY – ONE REQUIRED		
pr2	ONE	PIPE 1 1/2" (1.90 O.D.) x 8'-6"±	A53 GR B	CUT TO SUIT
bb2	2	STEEL FLANGE (#627A BY WAGNER)	STEEL	

ALL MATERIAL SHOWN ON THIS DRAWING SHALL RECEIVE ONE COAT OF STANDARD SHOP PRIMER U.N.O.

NO.	DATE	REVISION DESCRIPTION	ISSUED BY
2			
1			
0	5/24/22	ISSUE FOR FABRICATION	TS

STAIR A
FABRICATION DETAILS

DRAWN BY: KSB
CHECKED BY: TS
SCALE: AS NOTED

PROJECT NUMBER
21-175

RD-9